Micro Encoder

Specifications	06 Series	09 Series
• Power Supply	DC 5V±10%	DC 5V±10%
• Current Consumption	30 mA or less	40mA or less
• Signal Detection Code	Incremental	Incremental
• Resolutions (pulse/revolution)	100, 200, 300, 360	300,500,1000
• Output Phase	AB type (2 channels) with index (Z)	AB type (2 channels) with index (Z)
• Output Signal	Square wave, open collector output	Square wave, voltage output, open collector output
• Sinking Current	4mA MAX	20mA MAX
• Max. Frequent Response	100 KHz	100 KHz
• Phase Difference	T/4±T/8	T/4±T/8
• Rise and Fall Time	2 μs or less	2μs or less
• Starting Torque	0.3×10^{-3} N·m (3gf·cm) or less	1.0×10^{-3} N·m (10gf·cm) or less
• Shaft Loading	Thrust axial 1.9N (200g)	Thrust axial 1.9N (200g): resolution range 32 to 500 0.98N (100g): resolution 1000
	Radial 0.98N (100g)	Radial 1.9N (200g): resolution range 32 to 500 0.98N (100g): resolution 1000
• Shaft Revolution	6000 rpm	6000 rpm
• Operating Temperature	0°C~60°C	0°C~60°C
• Storage Temperature	–20°C~80°C	–20°C~80°C
• Humidity	RH 90% or less, no condensation	RH 90% or less, no condensation
• Vibration	Endurance: 55 Hz, double amplitude 1.5 mm, 2 hours in X, Y and Z directions, respectively	Endurance: 55 Hz, double amplitude 1.5 mm, 2 hours in X, Y and Z directions, respectively
• Shock	Endurance: 500 m/s2 (about 50G), 3 times in X, Y and Z directions, respectively	Endurance: 500 m/s2 (about 50G), 3 times in X, Y and Z directions, respectively
• Weight	5g	10g

06 SERIES

Output Waveform

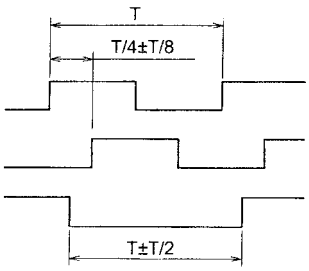

Appearance

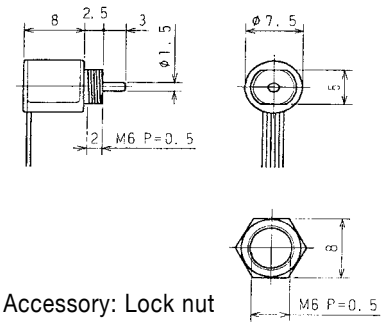

Accessory: Lock nut

09 SERIES

Output Waveform

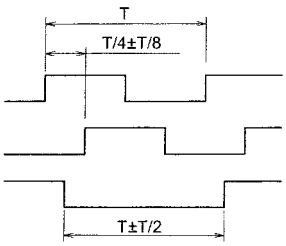

Appearance

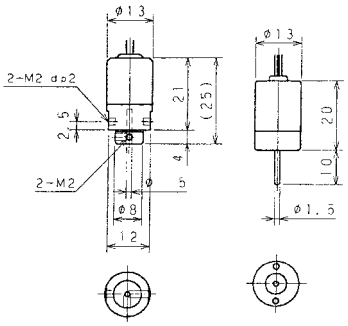

Hollow Shaft Type Shaft Type

HARMONIC DRIVE

Sold & Serviced By:
ELECTROMATE
Toll Free Phone (877) SERVO98
Toll Free Fax (877) SERVO99
www.electromate.com
sales@electromate.com

Harmonic Drive® TECHNOLOGIES